PN_SEQUENCE_GENERATOR/TX_CLK

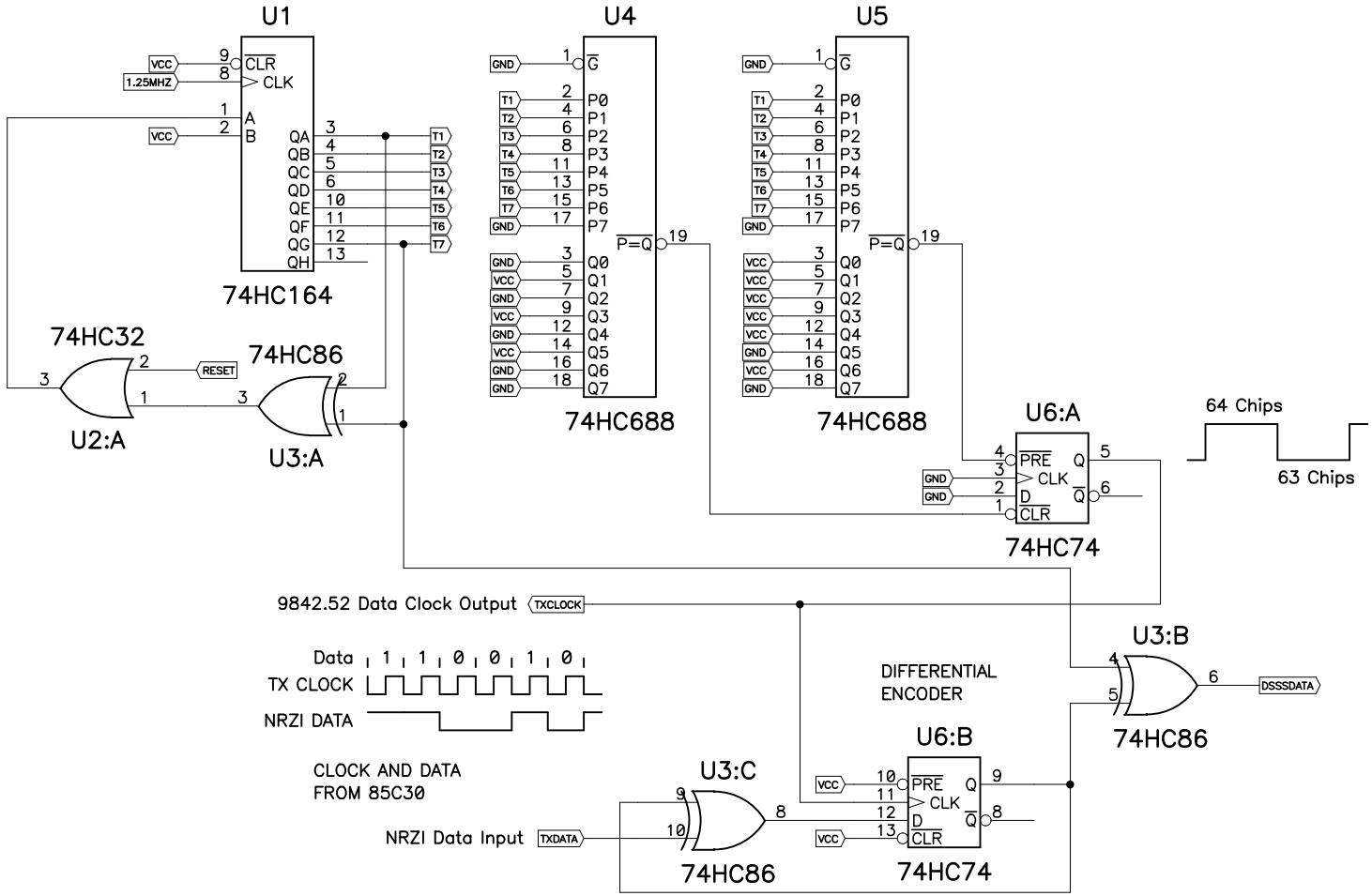

Title	PANSAT PN Code Generator	
Size A	Number MOD001	Rev A
Date 8/19/1999	Drawn by Rigmaiden	
Filename modem01.SCH	Sheet 1 of 4	

CURRENT DRIVER / BIPHASE MODULATOR / CORRELATOR

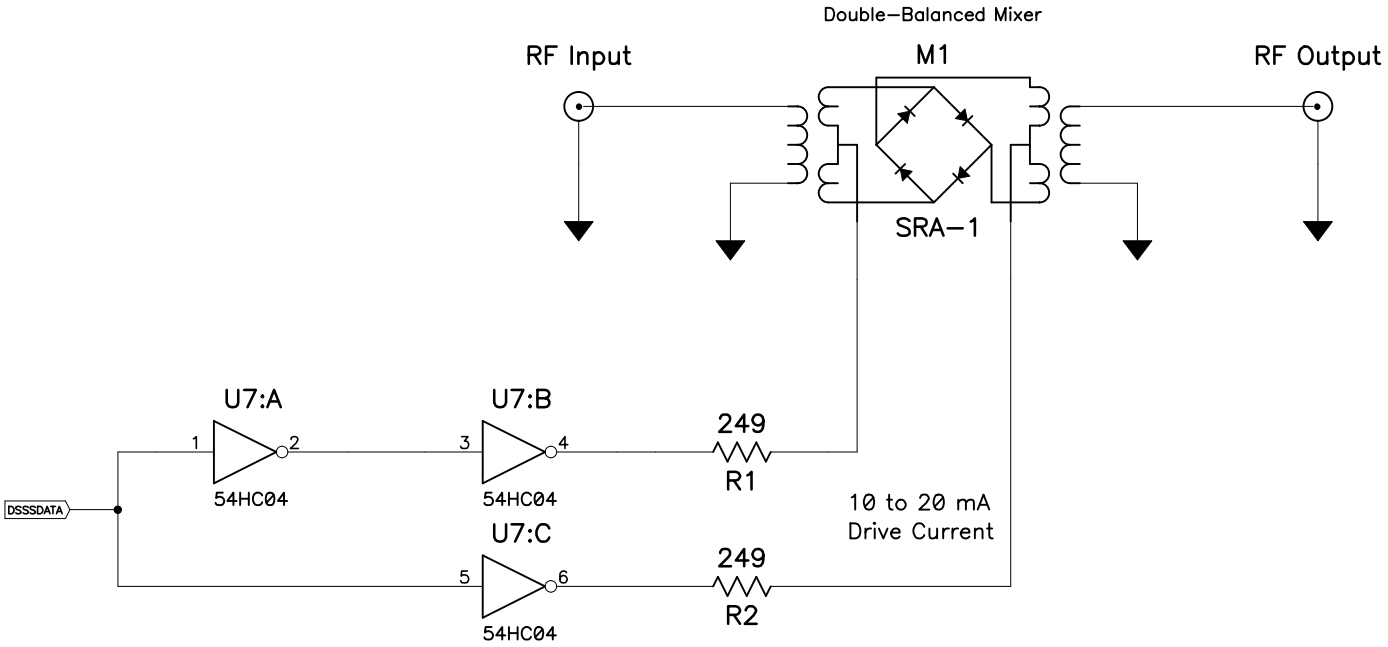

Title PANSAT PN Code Generator		
Size A	Number MOD001	Rev A
Date 8/19/1999	Drawn by Rigmaiden	
Filename modem01.SCH	Sheet 2 of 4	

DIFFERENTIAL DATA DECODER

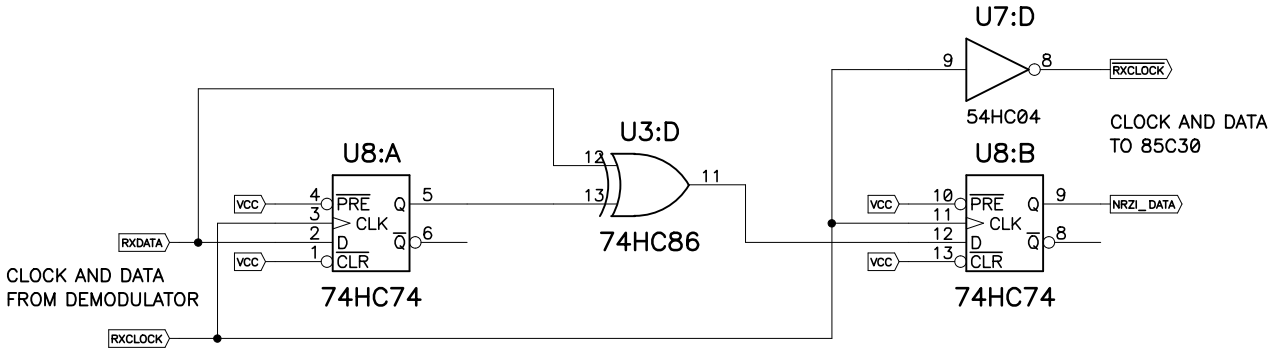

Title PANSAT PN Code Generator		
Size A	Number MOD001	Rev A
Date 8/19/1999	Drawn by Rigmaiden	
Filename modem01.SCH	Sheet 3 of 4	

DELAY–LOCK TRACKING LOOP

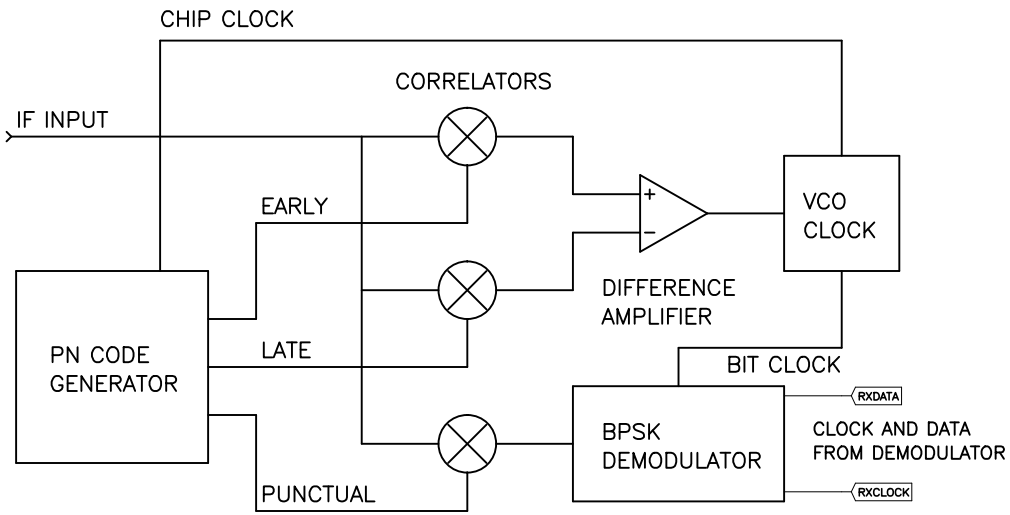

Differentially Encoded Binary Phase Shift Keying (DE/BPSK)
Direct Sequence Spread Spectrum (DSSS)

TX/RX FREQUENCY 436.5MHz

CHIP CLOCK RATE 1.25MHz

BIT CLOCK RATE 9842.52Hz

ONE DATA BIT EQUALS 127 CHIPS OR ONE SEQUENCE

Title PANSAT PN Code Generator		
Size A	Number MOD001	Rev A
Date 8/19/1999	Drawn by Rigmaiden	
Filename modem01.SCH	Sheet 4 of 4	